ECO NO.	DATE	REV.	REVISION RECORD	AUTH.	DR.BY

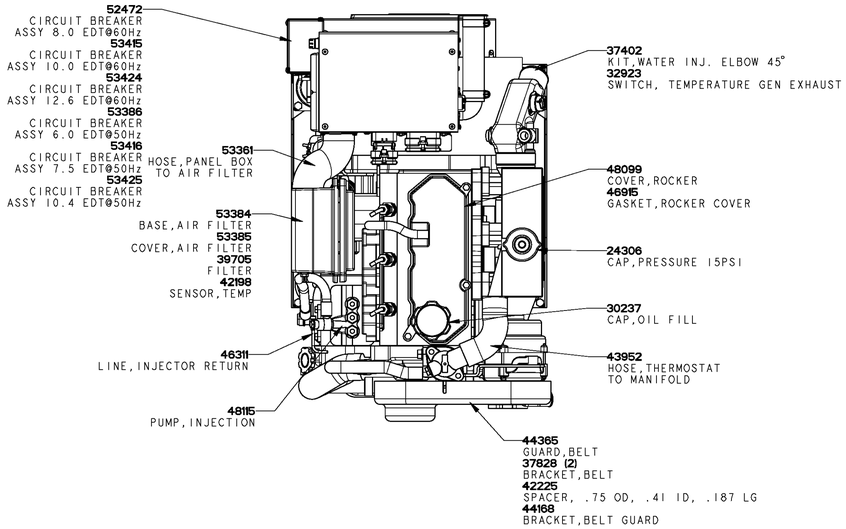

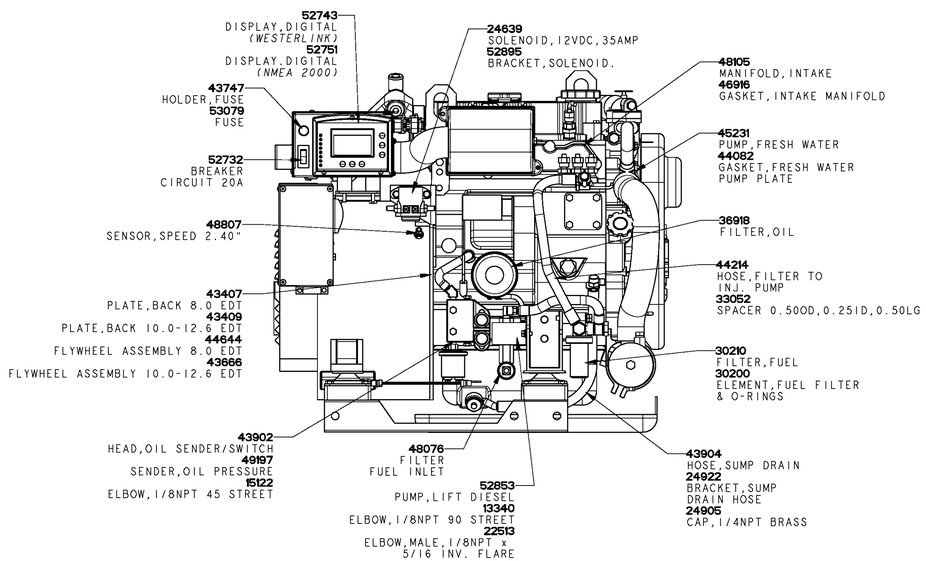

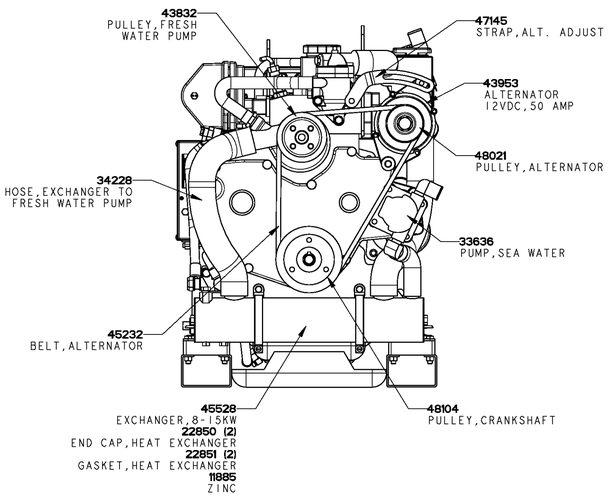

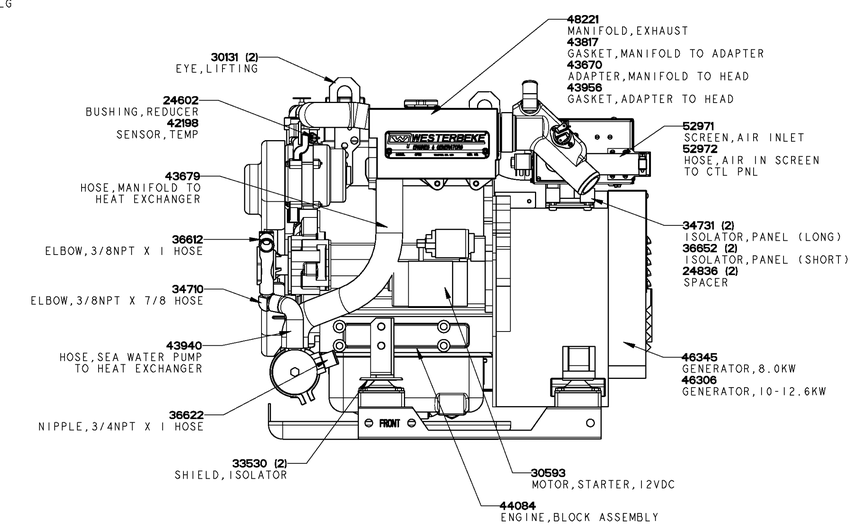

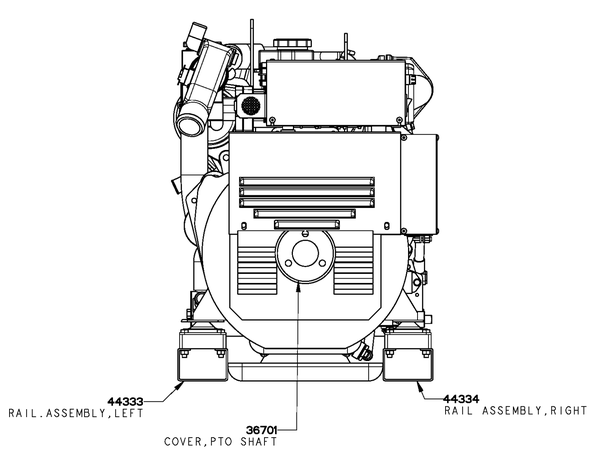

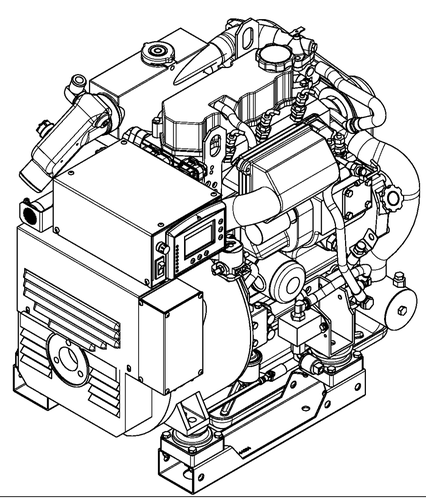

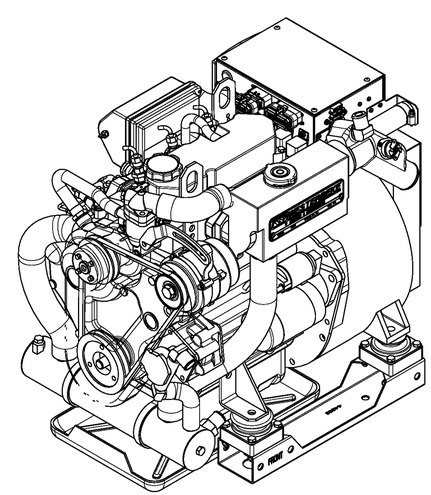

TOLERANCES (UNLESS OTHERWISE NOTED)	WESTERBEKE CORPORATION TAUNTON, MA. 02780			
INCHES: .XX ± .02, .XXX ± .005, CAST ± .03, ANGLES ± .5, FINISH 63; MILLIMETERS: X. ± 1.0, .X ± .5, .XX ± .13	TITLE PARTLIST DRAWING 8.0-12.6 EDT			
DIMENSIONS INCHES / MILLIMETERS (WHEN APPLICABLE)	DRAWN BY GA	DATE 16/Apr/07	MATERIAL: --- --- ---	
	APPROVED BY	DATE		
	SCALE 0.188	SIZE D	DRAWING NUMBER 52897	REV. -
	SHT. 1 OF 1			